HANDBOOK OF INSTRUCTIONS WITH PARTS CATALOG

A-17

PORTABLE FIRE EXTINGUISHER

Published under joint authority of the Commanding General, Army Air Forces, the Chief of the Bureau of Aeronautics, and the Air Council of the United Kingdom.

NOTICE: This document contains information affecting the national defense of the United States within the meaning of the Espionage Act, 50 U. S. C., 31 and 32, as amended. Its transmission or the revelation of its contents in any manner to an unauthorized person is prohibited by law.

GRAY PTG. CO., FOST., O. 1-3-45-20.200

25 MAY 1943

REVISED 10 JANUARY 1945

THIS PUBLICATION MAY BE USED BY PERSONNEL RENDERING SERVICE TO THE UNITED STATES OR ITS ALLIES

Instructions Applicable to AAF Personnel.

Paragraph 5.*d.* of Army Regulation 380-5 relative to the handling of restricted printed matter is quoted below:

"*d.* Dissemination of restricted matter.—The information contained in restricted documents and the essential characteristics of restricted material may be given to *any person known to be in the service of the United States and to persons of undoubted loyalty and discretion who are cooperating in Government work*, but will not be communicated to the public or to the press except by authorized military public relations agencies."

Instructions Applicable to Navy Personnel.

Navy Regulations, Article 75½, contains the following paragraphs relating to the handling of restricted matter:

"*(b) Restricted* matter may be disclosed to persons of discretion in the Government service when it appears to be in the public interest.

"*(c) Restricted* matter may be disclosed, under special circumstances, to persons not in the Government service when it appears to be in the public interest."

The Bureau of Aeronautics Circular Letter No. 12-43 further states:

"Therefore, it is requested that all naval activities check their own local regulations and procedures to make sure that handbooks, service instructions and other *restricted* technical publications are actually being made available to both civilian and enlisted personnel who have use for them."

General.

These instructions permit the issue of restricted publications to civilian contract and other accredited schools engaged in training personnel for Government work, to civilian concerns contracting for overhaul and repair of aircraft or aircraft accessories, and to similar commercial organizations.

LIST OF REVISED PAGES ISSUED

NOTE: A heavy black vertical line, to the left of the text on revised pages, indicates the extent of the revision. This line is omitted where more than 50 percent of the page is revised.

Page No.	Latest Revised Date
B Deleted ...	10 September 1944
1	10 January 1945
3	10 January 1945
9	10 September 1944
11	10 September 1944

ADDITIONAL COPIES OF THIS PUBLICATION MAY BE OBTAINED AS FOLLOWS:

AAF ACTIVITIES.—Submit requisitions through the Air Inspector, Technical, whenever practicable, in accordance with T. O. No. 00-25-3 to the Commanding General, Fairfield Air Service Command, Patterson Field, Ohio, Attn: Publications Distribution Branch, as outlined in AAF Regulation 5-9. For details of Technical Order distribution, see T. O. No. 00-25-3.

NAVY ACTIVITIES.—Submit requests to the Chief, Bureau of Aeronautics, Navy Department, Washington, D. C. Also, see NavAer 00-500 for details on distribution of technical publications.

BRITISH ACTIVITIES.—Submit requirements on Form 294A, in duplicate, to the Air Publications and Forms Store, New College, Leadhall Lane, Harrogate, Yorkshire, England.

Published by Authority of The Commanding General, Army Air Forces

and accepted by The Air Council of The United Kingdom.

TABLE OF CONTENTS

PARTS CATALOG

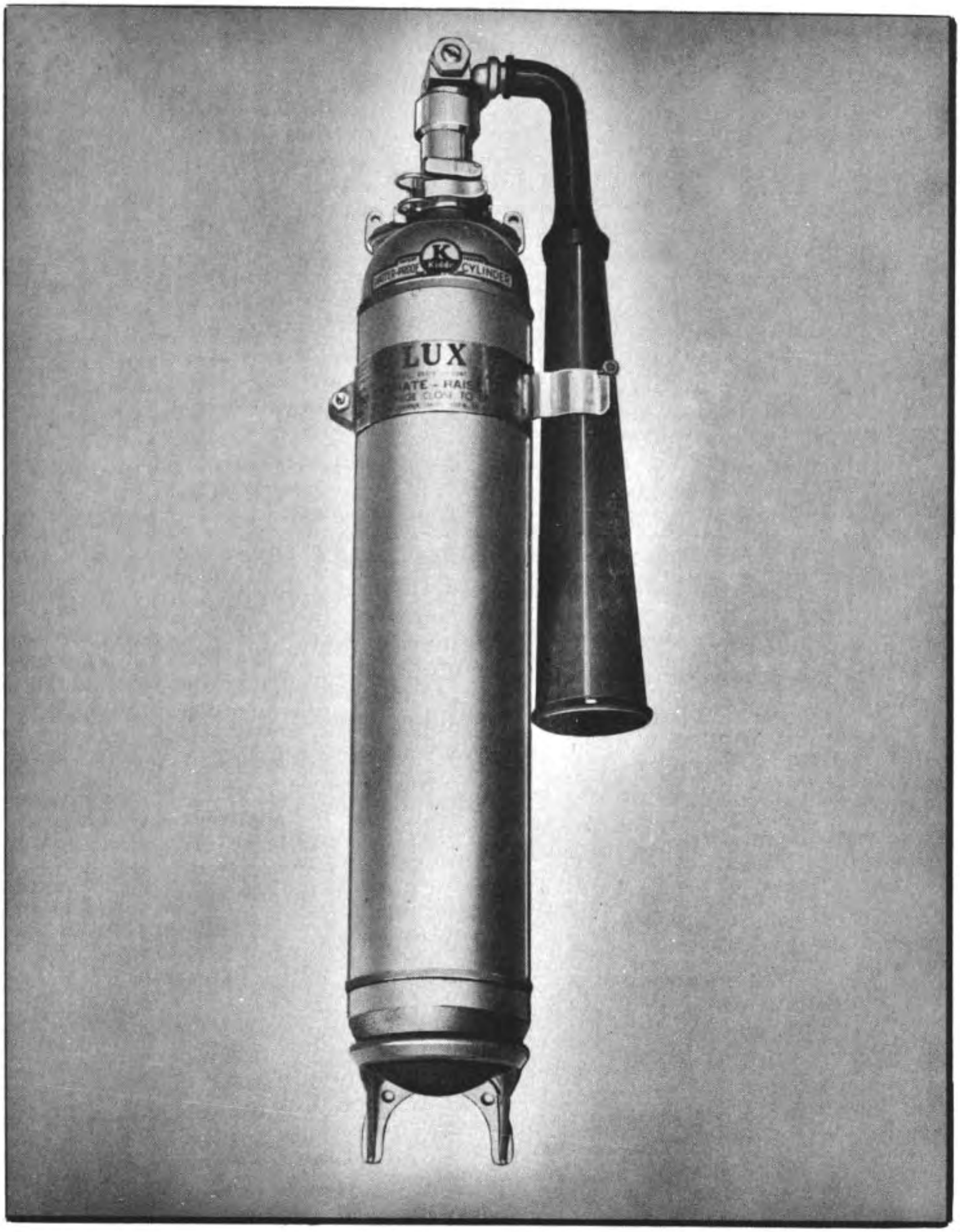

Figure 1 - Type A-17 Portable Fire Extinguisher

SECTION I

INTRODUCTION

This Handbook with Parts Catalog contains Instruction for the Operation and Maintenance of the Type A-17 Portable Fire Extinguisher furnished by Walter Kidde and Company, Inc., Bloomfield, N. J., and Kelsey-Hayes Wheel Co., Detroit Mich., and manufactured according to AAF Specification No. 85-15.

SECTION II

DESCRIPTION

1. GENERAL.

a. The extinguisher consists of a lightweight, shatterproof steel cylinder fitted with a cylinder valve to retain a proper charge of carbon dioxide (CO_2) gas. The extinguisher is intended for use on small incipient fires in and about aircraft and equipment.

b. The cylinder conforms with the requirements of the Interstate Commerce Commission, Specification No. 3A-1800.

NOTE

When handling carbon dioxide cylinders, care should be taken not to drop the cylinders. If they are dropped, the cylinders may be dented and lose some of their strength.

2. DETAILED.

a. CYLINDER VALVE. - The cylinder valve is of the seat type. The main body is a brass forging with a male 1/2-inch pipe thread, conforming with Specification No. AN-GGG-P-363, for fitting the valve in the cylinder. The body is fitted with a retainer; within the retainer a cam is housed which presses a plunger and stem assembly onto the valve body seat. A safety disc within the stem assembly is provided to relieve the pressure within the cylinder should the pressure become excessive due to a high temperature. The maximum safe storage temperature is 54.5°C (130°F). The valve is of the single-acting, single-seat type and is so designed that the internal stem does not rotate relative to the valve body seat. It is provided with a raised body seat, and a flat composition stem seat. A rigid syphon tube (13) extends from the valve body to the bottom of the cylinder to assure complete discharge of the carbon dioxide.

b. CARBON DIOXIDE. - The extinguisher is supplied fully charged with 3 pounds 10 ounces carbon dioxide (CO_2) gas.

3. INSTALLATION.

Installation should be accomplished in accordance with the applicable airplane drawings. (See figure 2.)

SECTION III

OPERATION

1. PRINCIPLE OF OPERATION.

The cam within the retainer normally depresses the plunger and stem assembly onto the valve body seat. When the horn is raised, the cam is rotated allowing the plunger and stem assembly to be forced upward by the pressure of the gas within the cylinder. The gas pressure above the liquid carbon dioxide (CO_2) forces the liquid carbon dioxide (CO_2) through the syphon tube (13) through the holes in the stem assembly, through the plunger and out of the discharge horn. The discharged gas forms an inert atmosphere about the fire, preventing oxygen from reaching the burning material, thus extinguishing the fire. Carbon dioxide further aids the extinguishing by its cooling effect.

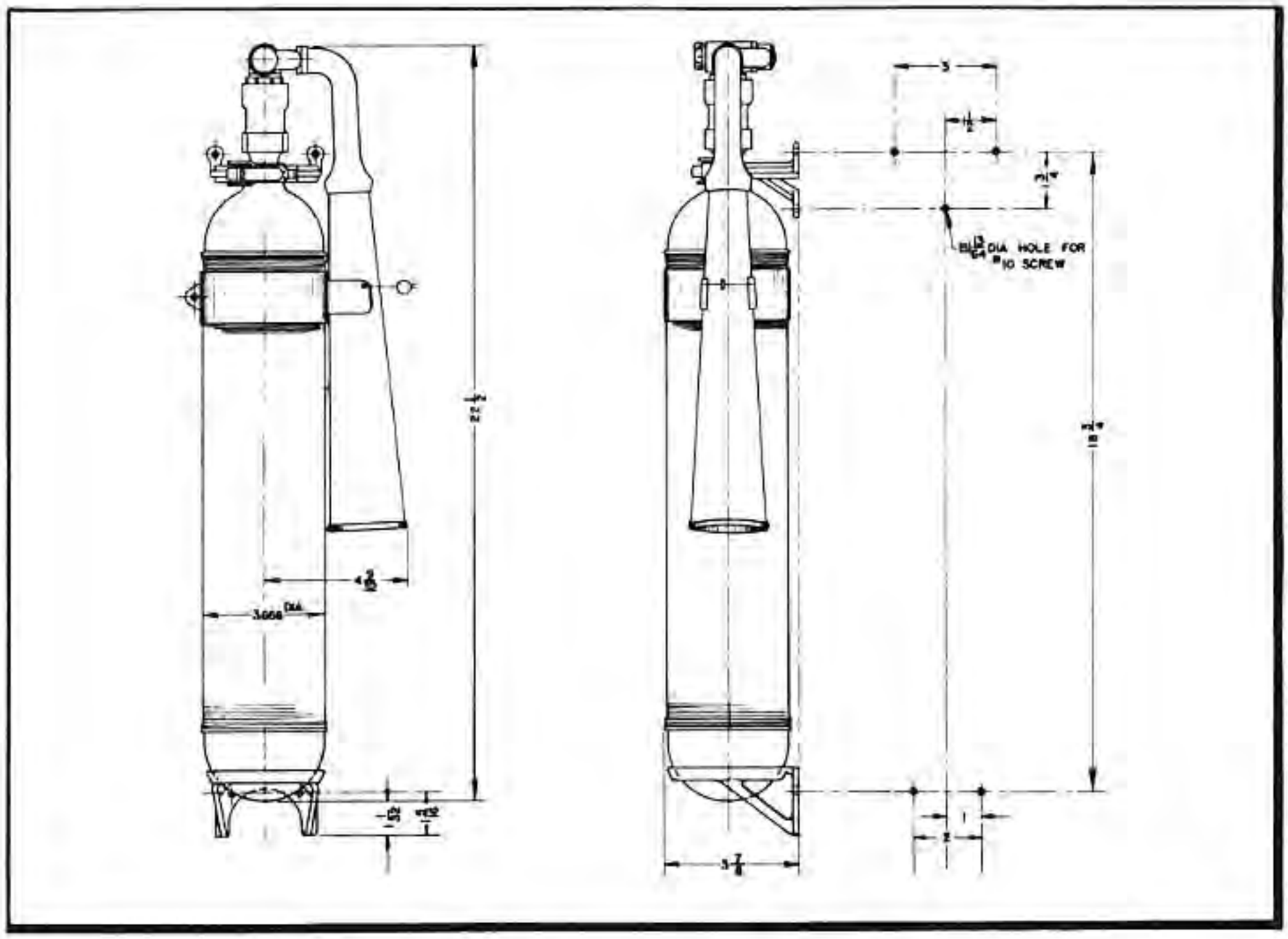

Figure 2 - Front and Side View Drawing

2. OPERATION INSTRUCTIONS.

Grasp the cylinder with one hand, swing the horn upward with the other hand through an arc of about 90 degrees; this discharges the cylinder. The discharge may be temporarily stopped by swinging the horn through another 90-degree arc. It is important to hold the extinguisher erect while in use.

CAUTION

Do not attempt to place horn back in clip after discharge.

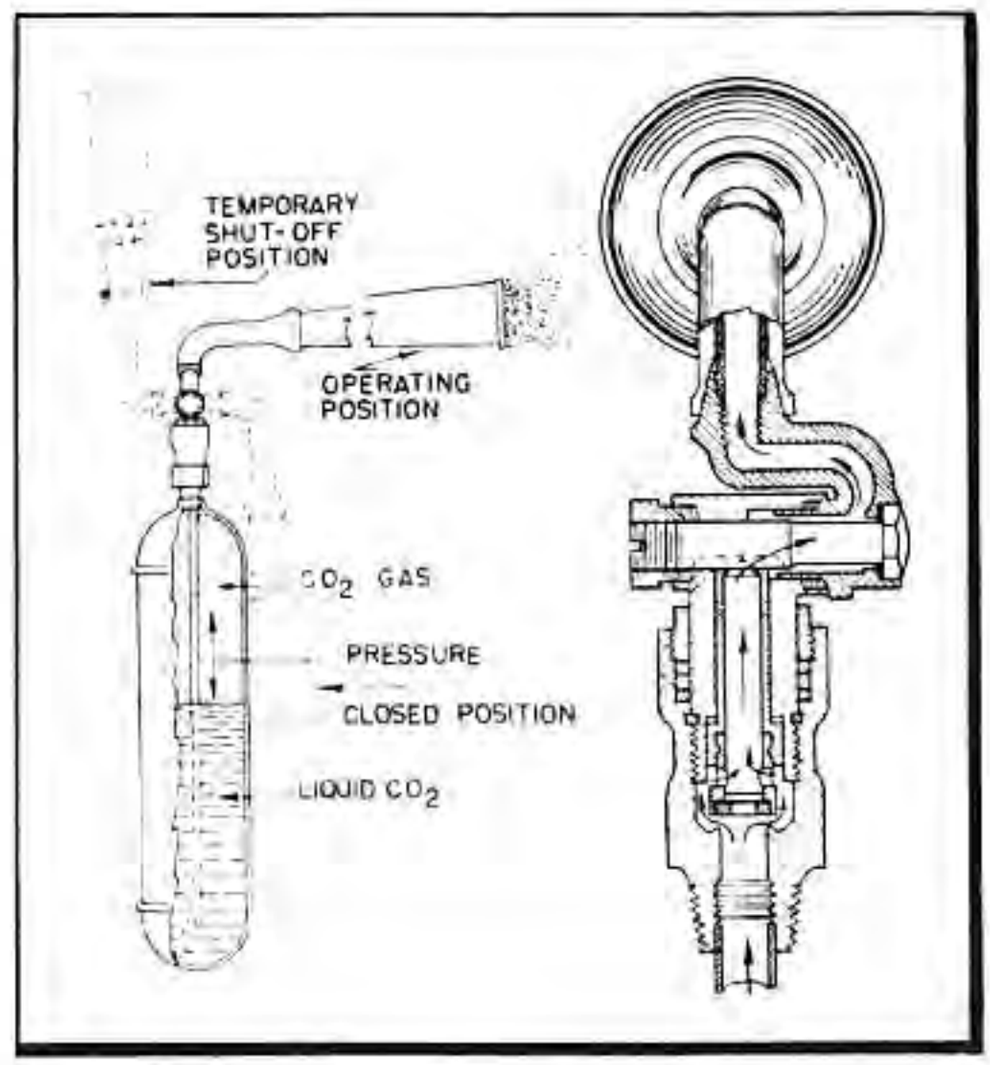

Figure 3

Sectional Drawing of Valve Assembly and Operating Position of Horn

SECTION IV

SERVICE INSPECTION, RECHARGING, AND LUBRICATION

1. SERVICE TOOLS REQUIRED.

No service tools are required.

2. INSPECTION. (See T. O. No. 06-20-3.)

NOTE

In accordance with T. O. No. 00-20A-2 a summary of the periodic inspection prescribed herein will be entered on the Master Airplane Maintenance Instruction Forms maintained in the back of the Form 41B for the airplanes affected.

COLUMN NO. 43
AIRPLANE GENERAL

Preflight Inspection

Examine seal wire around discharge horn. If it is not intact, cylinder has been discharged. Have extinguisher replaced.

Daily Inspection

Check extinguisher for evidence of discharge and proper mounting. Check the weight inspection date on cylinder to determine the date the next weight inspection is due.

50-Hour Inspection

CO_2 cylinders will be removed and inspected at the expiration of the first complete 50-hour inspection following their initial installation or replacement. If leakage is found, the cylinder should be replaced.

6-Month Inspection

At the expiration of each 6 months following their initial installation or replacement the CO_2 cylinder must be removed and checked for evidence of complete or partial discharge by weighing. If the weight indicates no loss of charge the inspection date will be stenciled on the cylinder and returned to stock as a serviceable part. If leakage is noted the cylinder will be recharged.

3. RECHARGING.

a. Remove discharge horn from tube.

b. Hold cylinder firmly and turn retainer counterclockwise until stop position is reached. Do not force beyond this position.

c. Rotate horn swivel counterclockwise (when facing valve as shown in drawing). Letter "T" on horn swivel should face upward. Strike bottom of cylinder gently if difficulty is found in rotating horn swivel to proper position.

d. Connect adapter 16724 to horn tube. Charge cylinder with 3 pounds 10 ounces of carbon dioxide gas. (Weight of gas charge appears on extinguisher name plate.) Permissible variation is +0.0, -0.125 pounds or -2.00 ounces.

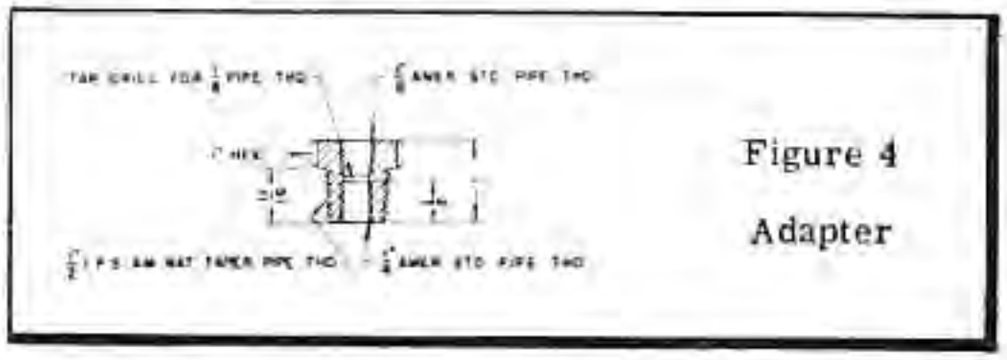

Figure 4

Adapter

e. When proper gas charge is reached tighten down retainer horn by turning clockwise leaving swivel pointed down. Be sure not to tighten retainer more than 100 inch-pound torque. (A 100 inch-pound torque is equal to a 10-pound force applied to a 10-inch wrench.) In event the cylinder is overcharged release excess gas by turning retainer counterclockwise.

f. Relieve gas pressure in charging line and disconnect adapter.

g. Test valve for leakage by submerging cylinder under water for a few minutes. Do not submerge entire valve under water or turn swivel. If valve shows sign of leakage, tighten retainer more but do not exceed 100 inch-pound torque.

h. Replace discharge horn and seal wire. Readjust name plate if necessary to bring horn in line with horn clip. Use only wire seal (11) as supplied by Walter Kidde and Company, Inc.

4. LUBRICATION.

No lubrication is required for maintenance of this extinguisher.

AN EMPTY CYLINDER IS USELESS - RECHARGE IMMEDIATELY AFTER USE

5. SERVICE TROUBLES AND REMEDIES.

TROUBLE	PROBABLE CAUSE	REMEDY
EXTINGUISHER FAILS TO OPERATE	Nozzle or recoil clogged.	Remove horn and clean.
	Empty.	Have recharged.
	Cam incorrectly assembled.	Remove and replace correctly.
EXTINGUISHER FAILS TO HOLD CHARGE	Blown safety disc.	Replace stem assembly.
	Swivel positioned incorrectly.	Position correctly.
	Damaged seat washer.	Replace stem assembly.
	Damaged body seat.	Reface seat.
	Retainer not tight.	Tighten to torque of 100 inch-pounds.

SECTION V

DISASSEMBLY, INSPECTION, REPAIR, AND REASSEMBLY

1. OVERHAUL TOOLS.

Part No.	Nomenclature	Application
80341	Valving fixture.	Remove valve from cylinder.
27431	Reseating tool.	Reface valve body seat.

2. DISASSEMBLY.

a. Knock out pin (23), remove nut (32), then gently knock out cam (37); also, remove cam packings (33, 34, and 30). In early portables only one packing (34) was used; however, later models used two packings (34). Loosen packing nut (28) until disengaged from threads; then, remove retainer (39) by turning counterclockwise. Retainer will come to a stop position; to remove, it will then be necessary to pull upward with considerable force. Remove retaining collar (29), retainer washer (27), and two packing washers (22). Remove plunger (35) from retainer (39) by driving out plunger pin (24); then, remove stem assembly (26) by knocking out stem pin (25).

b. Remove horn assembly (15) from tube and adapter assembly (31) right-hand thread. The tube (31) may also be removed from swivel (38) (right-hand thread).

c. If necessary to remove valve body (36) from cylinder (14) it is recommended that valving fixture 80341 be used.

3. INSPECTION.

a. Inspect stem assembly (26); if seat washer is damaged in any manner, the stem assembly must be replaced.

b. Inspect seat of valve body (36) for nicks or burrs. If damaged, resurface the seat using reseating tool 27431.

4. REPAIR.

a. Loosen setscrew and collar on reseating tool 27431 and screw guide bushing down as far as possible.

b. Drop tool into place until cutting edge rests upon seat.

c. Lift collar .007 inch, using feeler gage. Lock tool into place and remove feeler gage.

d. Proceed with machining operation taking necessary amount off seat. Collar on reseating tool will prevent tool from taking off to much material.

NOTE

Best results are obtained by using tool 2741 in drill press but, if necessary, tool can be turned with an ordinary-type wrench.

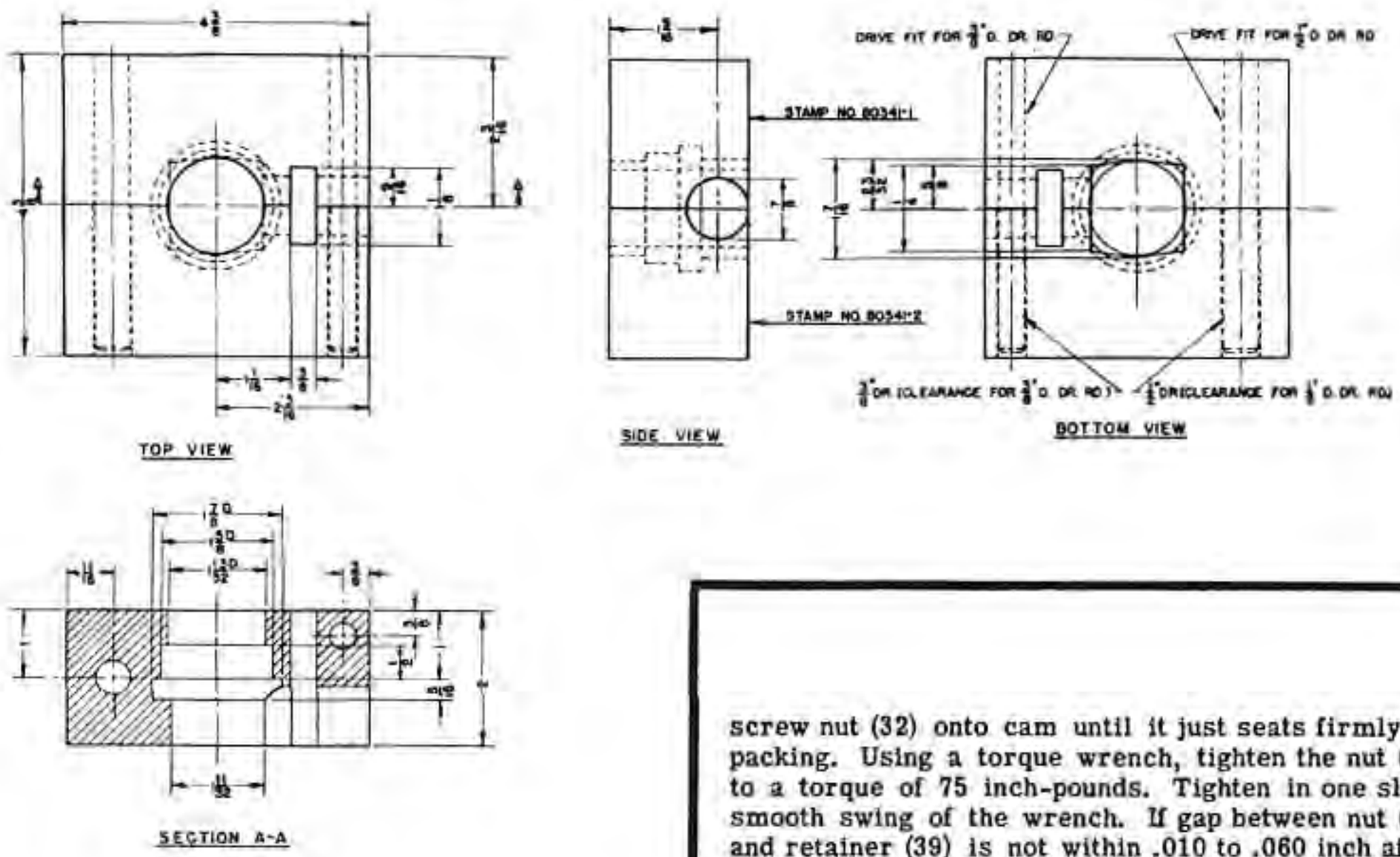

Figure 5 - Drawing - Valving Block

5. REASSEMBLY.

a. Insert leather washers (30) into retainer (39) until they are stacked flush with top. Grain side of leather (dark, shiny side) is to face inward on first washer and outward on following ones. Push washers firmly into place. DO NOT pound washers in with the aid of a hammer.

b. Place swivel (38) in retainer (39) so that clearance between swivel and retainer is within .010 to .045 inch. If this clearance is not met, add or remove washers (30) from retainer (39). When it is necessary to add washers, the top washer should first be replaced by a new one.

c. Slip gaskets (34) over cam (37). Make certain to use two gaskets (34). Place packing washers (33) into retainer (39), then insert cam through swivel and retainer. Punch mark on hex of cam (37) should point toward swivel outlet. This is important. Finally, screw nut (32) onto cam until it just seats firmly on packing. Using a torque wrench, tighten the nut (32) to a torque of 75 inch-pounds. Tighten in one slow, smooth swing of the wrench. If gap between nut (32) and retainer (39) is not within .010 to .060 inch after tightening, add or remove washers (33). When it is necessary to add washers, the top washer should first be replaced by a new one.

The cam nut (32) is now to be temporarily pinned by inserting a cotter pin or piece of suitable wire. If none of the locking pinholes in nut is aligned with slot in cam, remedy this by tightening nut until nearest hole is in line with slot.

d. Place stem assembly (26) into plunger (35), then drive stem pin (25) into place. (Pin must be flush with plunger surface.) Insert the plunger (35) into the retainer (39) and then drive plunger pin (24) into place. Then peen over pin must be flush with retainer surface.

e. Slide the packing nut (28), two leather packing washers (22), and washer retainer (27) onto the retainer (39). Then place retainer split collar (29) in the groove on retainer (39). Then place retainer subassembly into valve body (36) (right-hand thread). Packing nut (28) should then be tightened down.

f. Replace horn assembly (15) to tube assembly (31) and finally to swivel (38), tightening securely. In ready-to-operate position, the letter "T" on swivel (38) must be faced up.

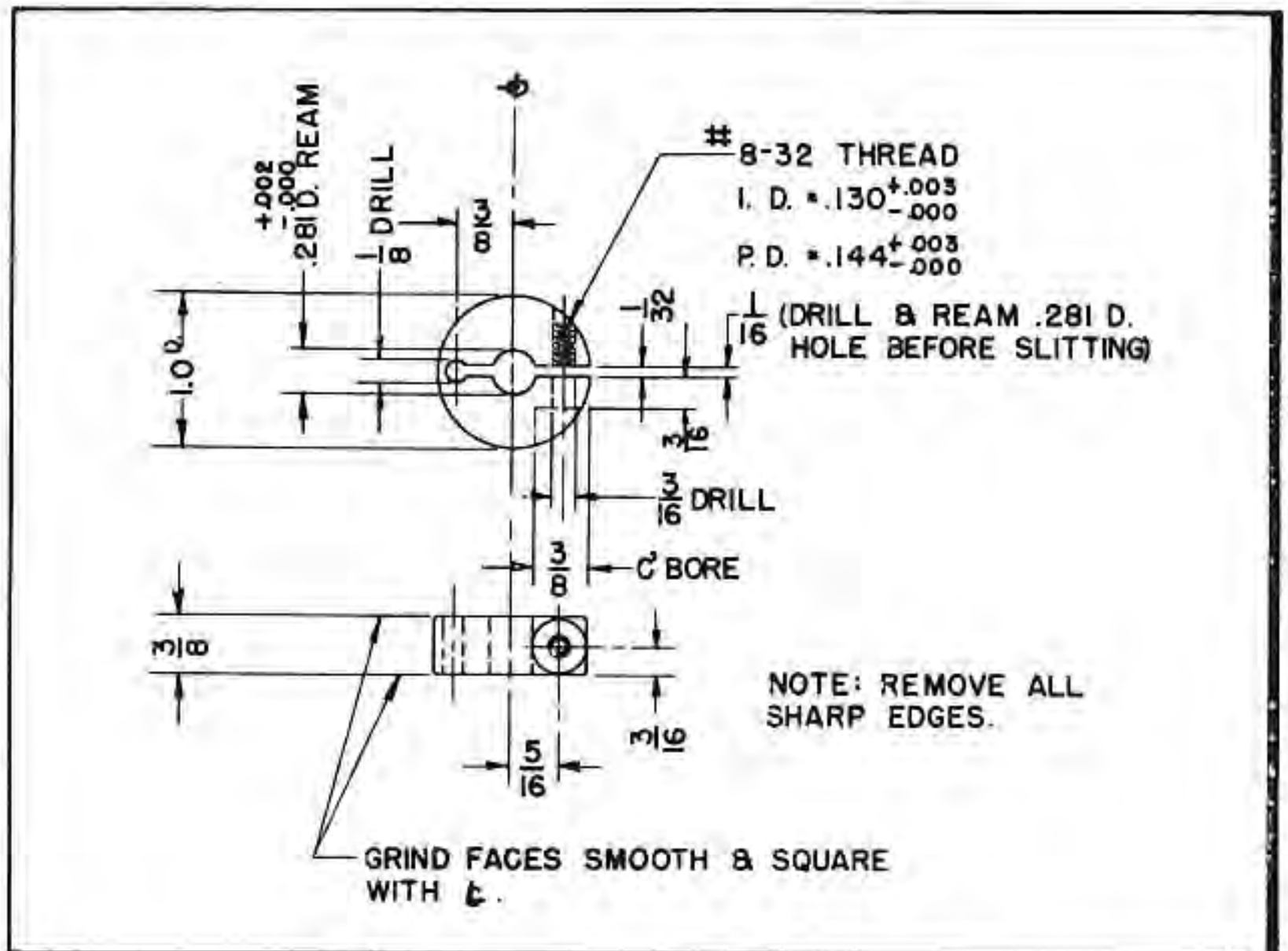

Figure 6

Drawing - Collar-Reseating Tool

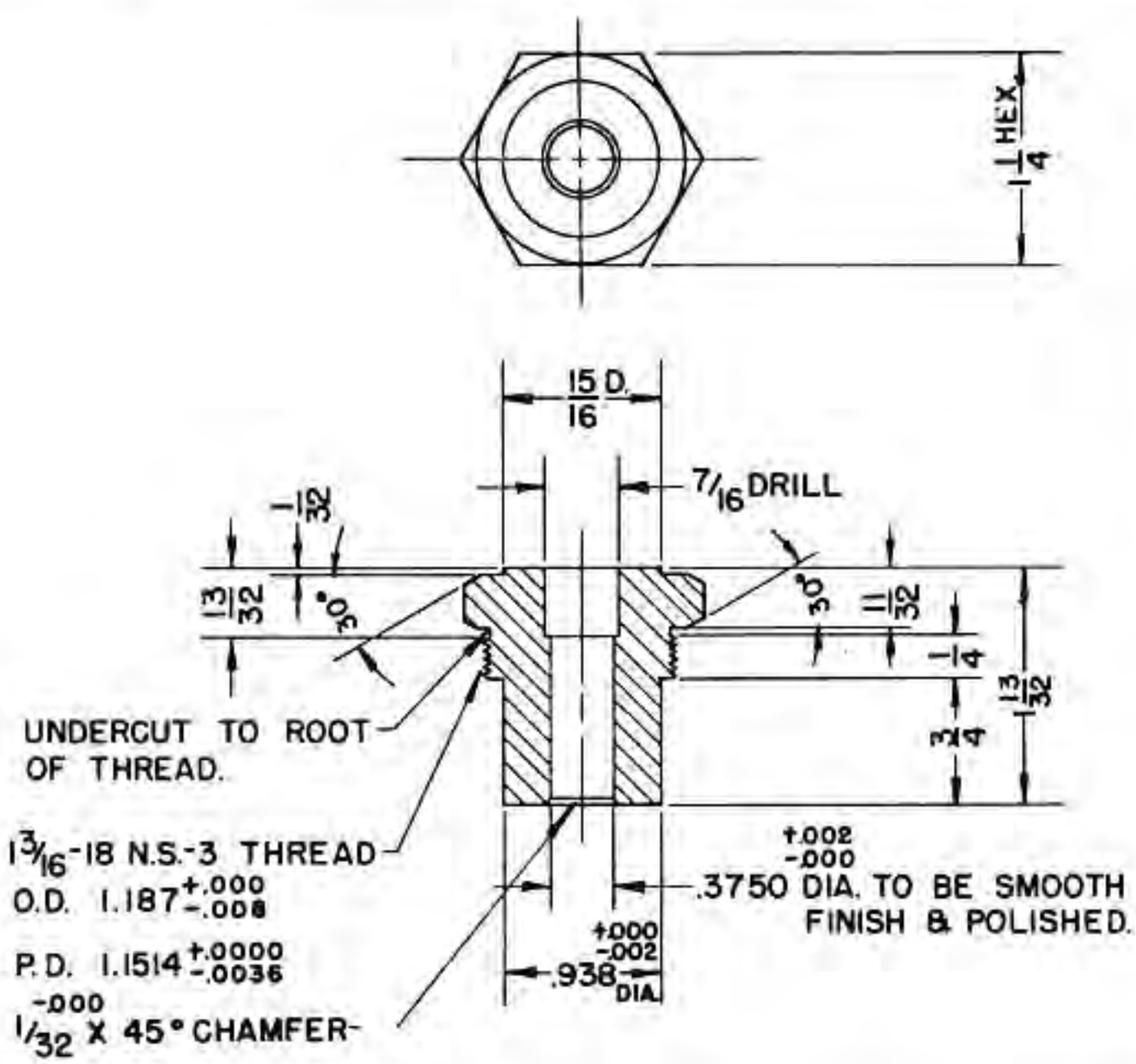

Figure 7

Drawing - Guide Bushing

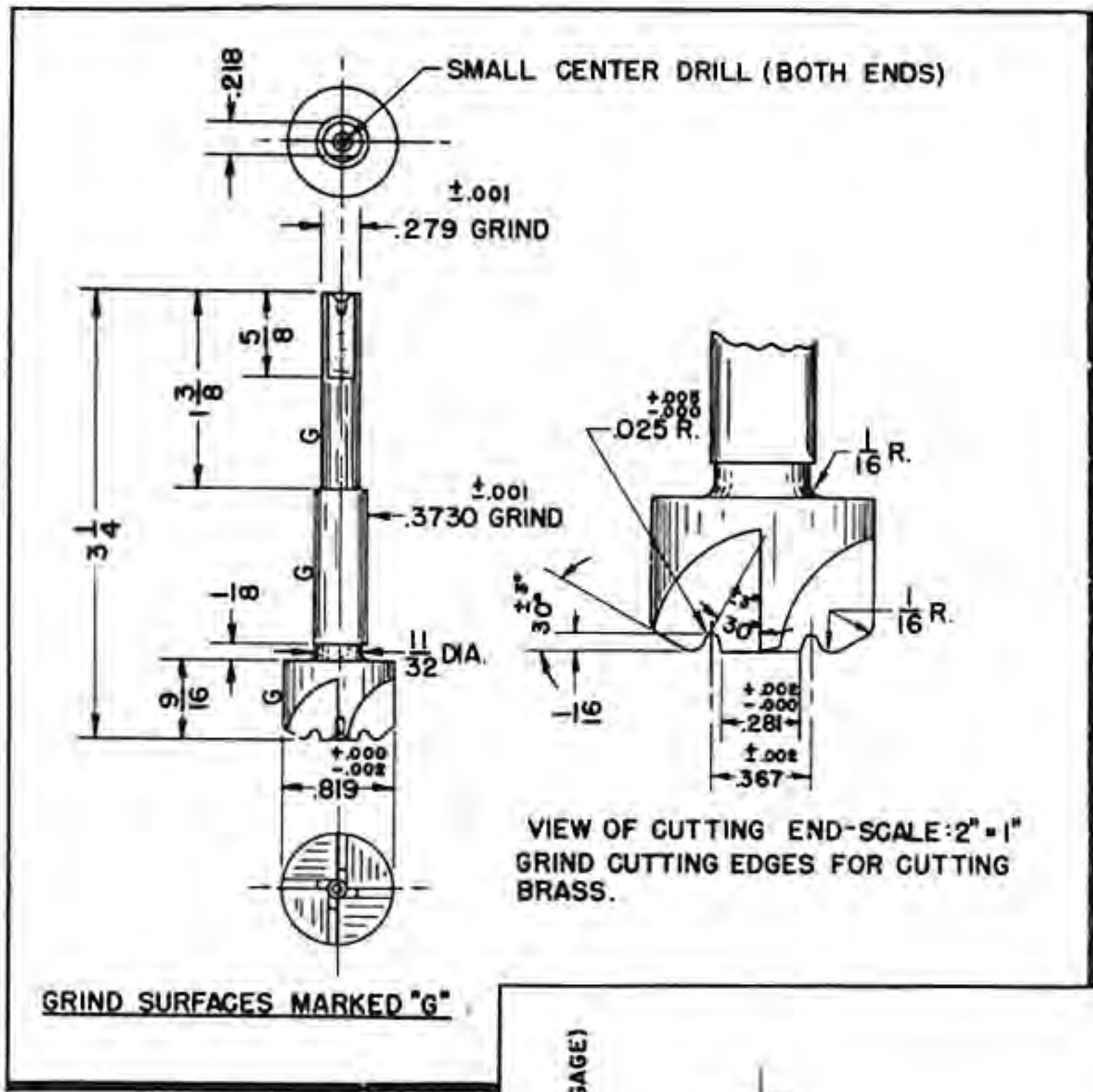

Figure 8

Drawing - Cutter-Reseating Tool

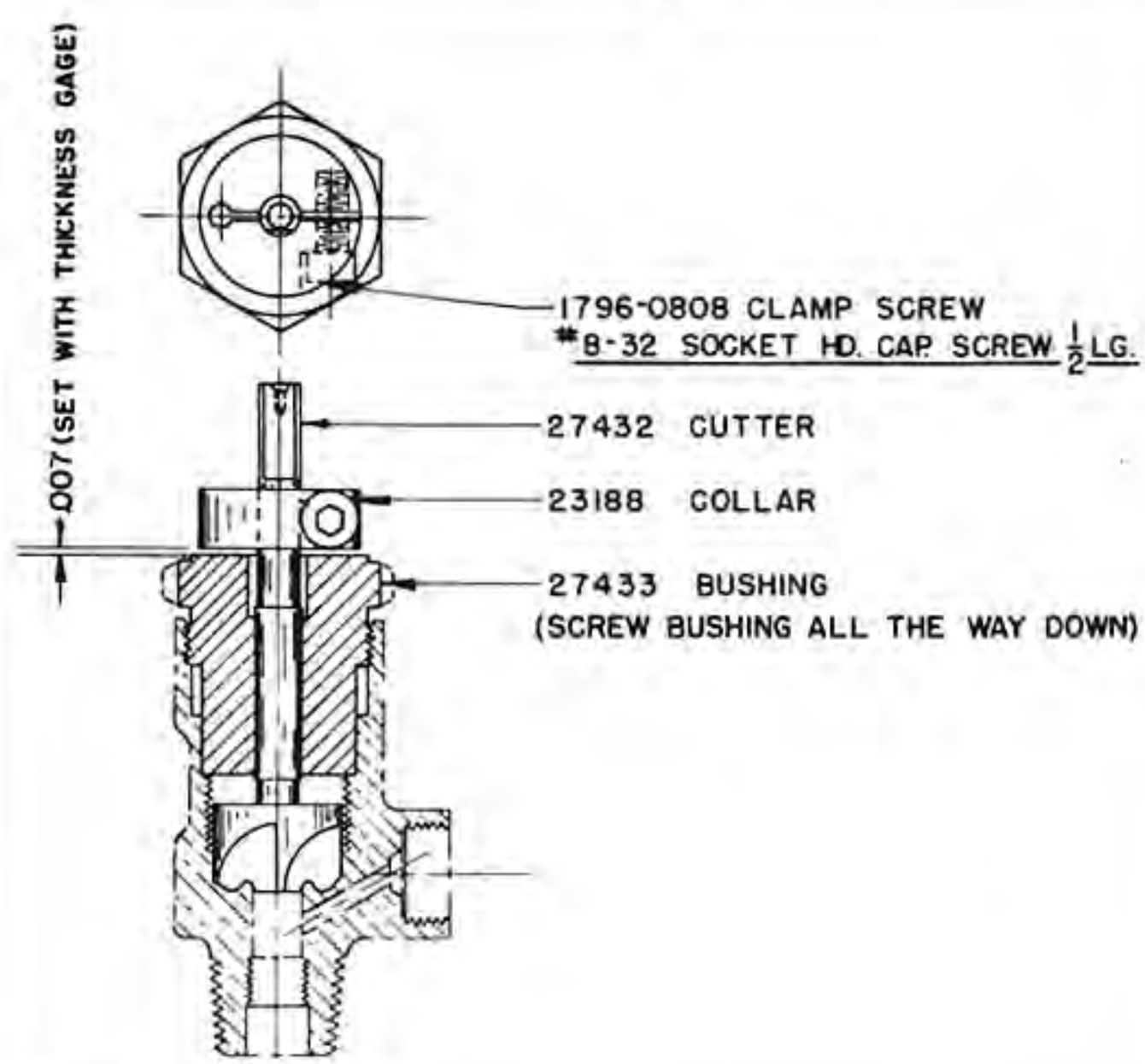

Figure 9

Drawing - Reseating Tool Assembly

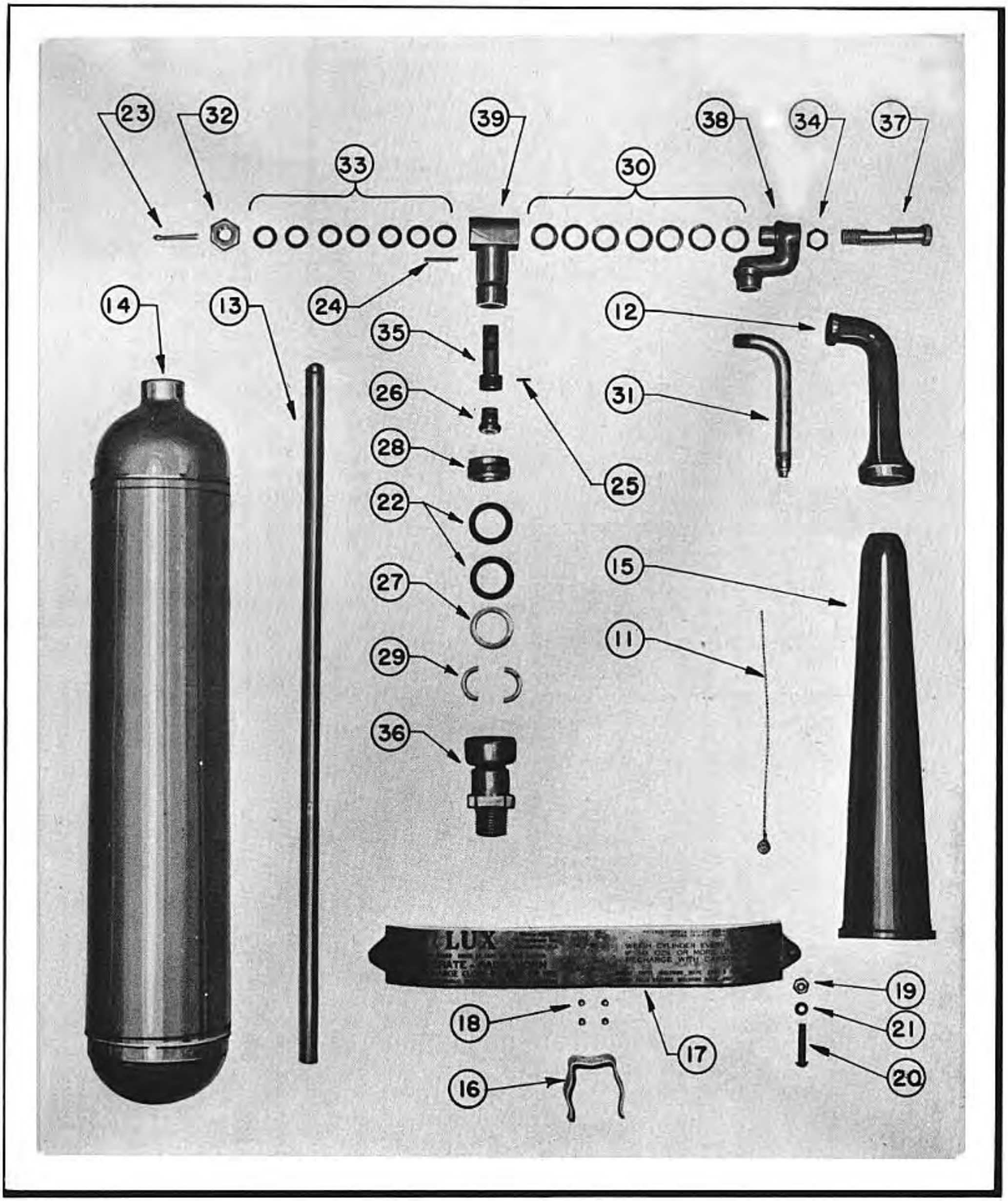

Figure 10 - Exploded View - Type A-17 Portable Fire Extinguisher

PARTS CATALOG

TYPE A17 PORTABLE FIRE EXTINGUISHER

SECTION I

1. This catalog contains Parts Lists for Type A17 portable fire extinguisher manufactured by Walter Kidde & Co., Inc., Bloomfield, N.J. and Kelsey-Hayes Wheel Co., Detroit, Mich.

2. The Assembly Parts List, Section II, consists of the name of each part and assembly. Each assembly and subassembly is followed by its component parts identified by index number.

3. The Numerical Parts List, Section III, contains the list of parts numbered numerically. The column headed "Total Quantity" indicates the total number required for each accessory.

4. The extinguisher and bracket weigh 16 pounds and contain .64 cubic feet.

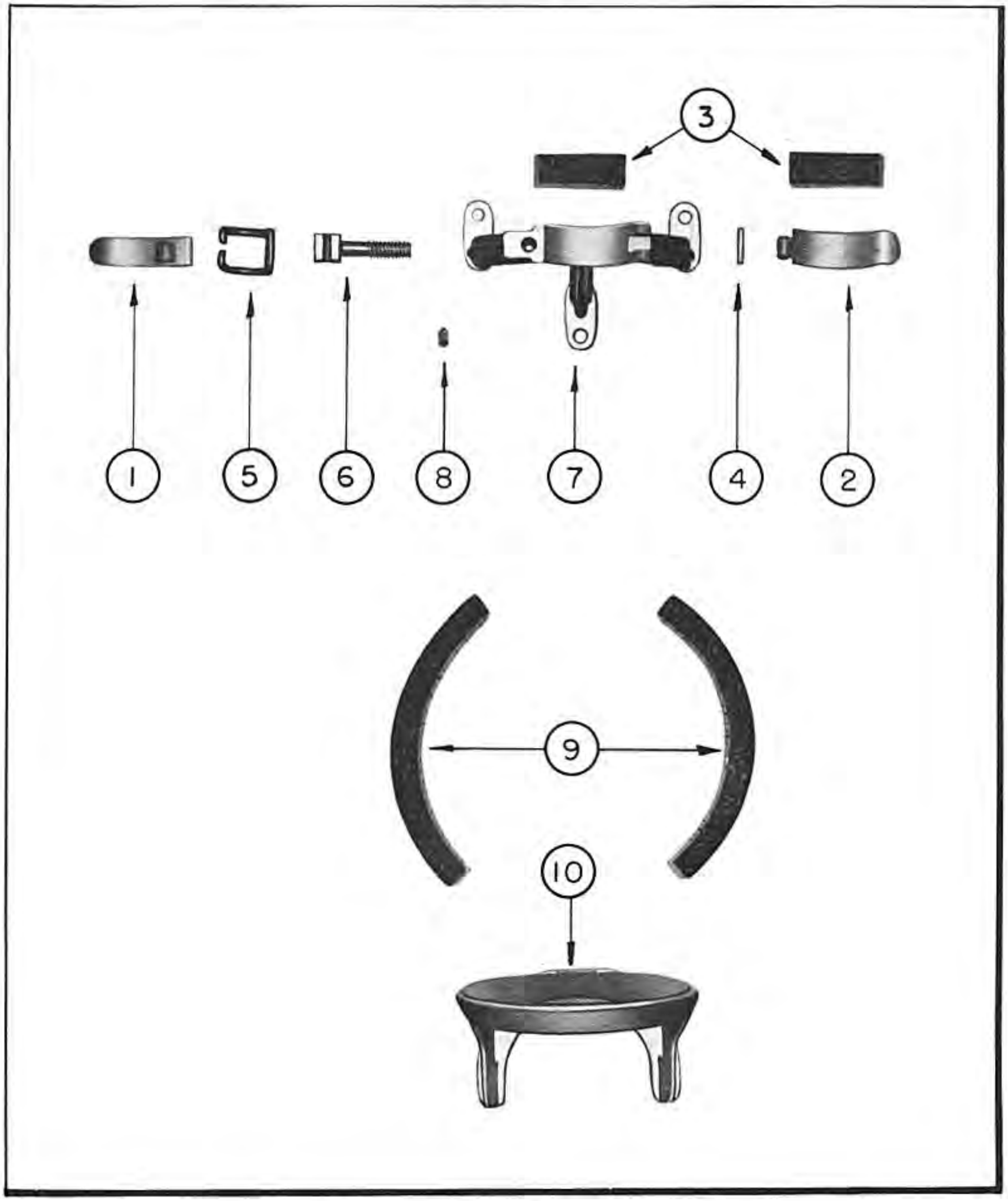

Figure 11 - Exploded View - Upper and Lower Bracket Assembly

FIG. NO.	INDEX NO.	STOCKED	GROUP Fire Extinguishers / MAJOR ASSEMBLY Type A-17 Portable								UNITS PER ASSY	PROPERTY CLASSIFICATION		
			PART NUMBER	1	2	3	4	5	6	NOMENCLATURE		U.S. NAVY	U.S. ARMY	BRITISH
11	1		79665							Complete Portable and Bracket Assembly (K-H 26720)	1			
11			20507							Bracket Assembly - Upper (K-H 26798)	1			
11	1		20446							Toggle - Lower (K-H 26885)	1			
11	2		20447							Strap - Toggle (K-H 26881)	1			
11	3		20453							Lining (K-H 26883)	2			
11	4		20503							Pin - Groove (K-H 26882)	1			
11	5		23644							Link - Toggle (K-H 26886)	1			
11	6		23645							Anchor - Toggle (K-H 26887)	1			
11	7		63656							Bracket - Body (K-H 26880)	1			
11	8		1612-0604							Screw (K-H 26888)	1			
11			23741							Bracket Assembly - Lower (K-H 26797)	1			
11	9		20502							Lining (K-H 26879)	2			
11	10		65096							Bracket - Body (K-H 26878)	1			
			64694							A-17 Portable Assembly (none)	1			
10	11		15262							Wire - Seal (K-H 26799)	1			
10	11		23648							Grip (K-H 26784)	1			
10	13		23652							Tube - Syphon (K-H 26783)	1			
10	14		24717							Cylinder Assembly (K-H 26680)	1			
			24258							Solder (none)	1			
			24418							Ring - End (K-H 26682)	2			
			62240							Cylinder (K-H 27218)	1			
			1931-2900							Wire (K-H 26710)				
10	15		64099							Horn Assembly (K-H 26732)	1			
			22330							Nozzle (K-H 26785)	1			
			99999							Horn (none)	1			
			64182							Name Plate and Clip Assembly (K-H 26725)	1			
10	16		23145							Clip (K-H 26727)	1			
10	17		64187							Strap (K-H 26726)	1			
10	18		1819-6303							Rivet (K-H 26791)	4			
10	19		1235-1100							Nut (K-H 26790)	1			
10	20		1236-1116							Screw (K-H 26857)	1			
10	21		1246-1000							Lock Washer (K-H 26789)	1			
			64650							Valve Assembly (K-H 26721)	1			
10	22		17910							Washer - Packing (K-H 26735)	2			
10	23		18087							Pin (K-H 26851)	1			
10	24		18266							Pin - Plunger (K-H 26775)	1			
10	25		18267							Pin - Stem (K-H 26774)	1			
10	26		18335							Stem Assembly (K-H 26766)	1			
			18336							Stem (K-H 26753)	1			
			18339							Disc - Valve (K-H 26754)	1			
			18343							Disc - Safety (K-H 26733)	1			
10	27		20893							Washer - Retainer (K-H 26770)	1			
10	28		20894							Nut - Packing (K-H 26768)	1			
10	29		20895							Collar - Retaining (K-H 26769)	1			
10	30		23649							Ring - Packing (K-H 26777)	7			
10	31		23655							Tube and Adapter Assembly (K-H 26780)	1			
			23191							Recoil (K-H 26781)	1			
			23653							Tube - Horn (K-H 26782)	1			
10	32		24960							Nut - Cam (K-H 26779)	1			
10	33		24961							Ring - Packing (K-H 26778)	7			
10	34		24962							Gasket (K-H 26776)	2			
10	35		24963							Plunger (K-H 26773)	1			
10	36		64308							Valve Body (K-H 26724)	1			
10	37		64648							Cam (K-H 26731)	1			
10	38		64649							Swivel (K-H 26730)	1			
10	39		64651							Retainer (K-H 26729	1			

NOTE: Symbol K-H identifies Kelsey-Hayes Wheel Company parts.

SECTION III—NUMERICAL PARTS LIST

PART NUMBER	GROUP LIST PAGE NUMBERS	TOTAL QUANTITY	PART NUMBER	GROUP LIST PAGE NUMBERS	TOTAL QUANTITY	PART NUMBER	GROUP LIST PAGE NUMBERS	TOTAL QUANTITY
1235-1100	13	1	20503	13	1	24960	13	1
1236-1116	13	1	20507	13	1	24961	13	7
1246-1000	13	1	20893	13	1	24962	13	2
1612-0604	13	1	20894	13	1	24963	13	1
1819-6303	13	4	20895	13	1	62240	13	
1931-2900	13		22330	13	1	63656	13	1
15262	13	1	23145	13	1	64099	13	1
17910	13	2	23191	13	1	64182	13	1
18087	13	1	23644	13	1	64187	13	1
18266	13	1	23645	13	1	64308	13	1
18267	13	1	23648	13	1	64648	13	1
18335	13	1	23649	13	7	64649	13	1
18336	13	1	23652	13	1	64650	13	1
18339	13	1	23653	13	1	64651	13	1
18343	13	1	23655	13	1	64694	13	1
20446	13	1	23741	13		65096	13	1
20447	13	1	24258	13	1	79665	13	1
20453	13	2	24418	13	2	99999	13	1
20502	13	2	24718	13	1			